FULL CUTOFF ADJUSTBLE WALL PACK

WPD0608

Certified LED Lights®

Product Data Sheet
Full Cutoff Wall Pack

Product Overview

Meet a smarter and more flexible wall pack engineered to meet the demands of modern exterior lighting applications. This wattage and kelvin selectable, full cutoff adjustable wall pack delivers exceptional versatility by allowing installers to easily customize both light output and color temperature in the field. Featuring adjustable tilt of up to 90 degrees, this series provides for a variety of applications for building perimeter, entrances, stairways and security lighting.

Designed for commercial and industrial environments, the full cutoff optic ensures precise, glare-free illumination while maintaining compliance with dark-sky and local lighting ordinances.

Combining energy-efficient performance, clean architectural appearance, and long-term reliability, this wall pack provides a future-ready solution that balances flexibility, efficiency, and visual comfort. This light come with a 5-yr warranty

Applications

Perimeter | Security | Pathways | General area

Main Features

* CCT selectable
* Wattage selectable
* Long-life LEDs provide 50,000 hours of operation
* Lumens: 120 Lu/W
* 0-10V dimming capability
* Heavy-duty, spring-loaded hinge
* Universal 120-277 AC voltage (50-60Hz) is standard
* Power factor > 0.90
* Beam angle: 65 x 95 degrees
* Color rendering index > 80
* Die cast aluminum housing with durable, dark bronze, powder coat paint. better cooling, light design
* Tough, UV-resistant polycarbonate lens
* Photocell control standard (easily bypassed if not required)

Product Warranty

WARRANTY 5 YEARS WARRANTY

Certified LED Lights, LLC - www.certifiedledlights.com
13375 N. Stemmons Frwy, Ste 300, Farmers Branch TX 75234

Certified LED Lights®

WPD0608 FULL CUTOFF ADJUSTBLE WALL PACK

Highlights and Certifications

DLC 5.1 Premium Listed

Wet Location

ETL Listed

Dimming: 0-10V

Field selectable wattage 3-way dip switch: 45W, 60W, 75W

Field selectable CCT 3-way dip switch: 3K, 4K, 5K

Key Specfifications

* DLC Premium listed
* ETL Listed
* Waterproof rating: Wet location
* Operating temperatures from (-40F to 113°F)
* **Vertical adjustability:** Heavy-duty, spring-loaded hinge provides vertical adjustability of the light housing. The head tilts from 0 to 90 degrees. Knurled notches securely retain rotated position even in harsh and rigorous environments

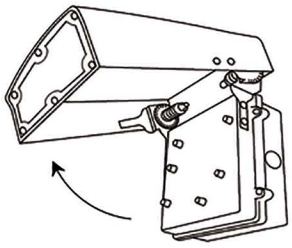

Lumens Performance

WPD0608											
45W				60W				75W			
Color	3,000K	4000K	5,000K	Color	3,000K	4000K	5,000K	Color	3,000K	4000K	5,000K
Lumens	6,031	6,253	6,118	Lumens	7,741	7,982	7,859	Lumens	9,126	9,778	9,281
Lumens/ Watt	134	139	136	Lumens/ Watt	129	133	131	Lumens/ Watt	124	140	127

Dimensions

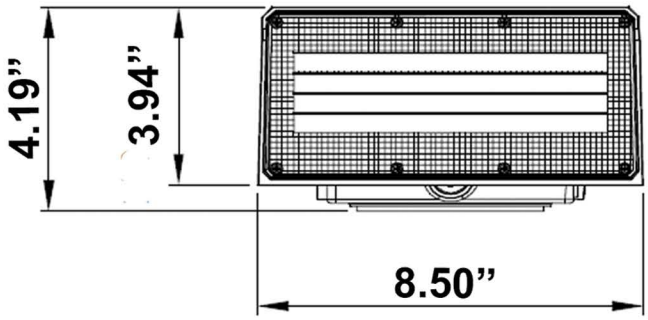

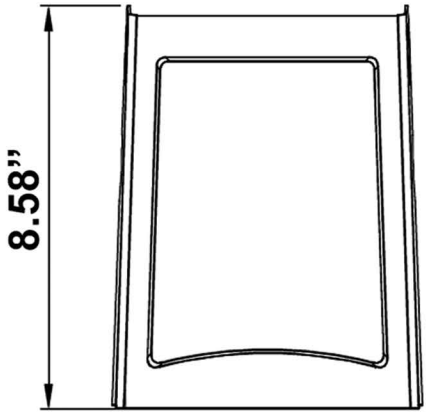

WPD0608 FULL CUTOFF ADJUSTBLE WALL PACK

Ordering Guide

PART #	Kelvin selectable	Lumens	Lumen/watt	Wattage selectable
WPD0608-75W-CCT	3K, 4K, 5K	9000 @ 75W	120	45 / 60 / 75

Wattage and Kelvin Selectable Switches

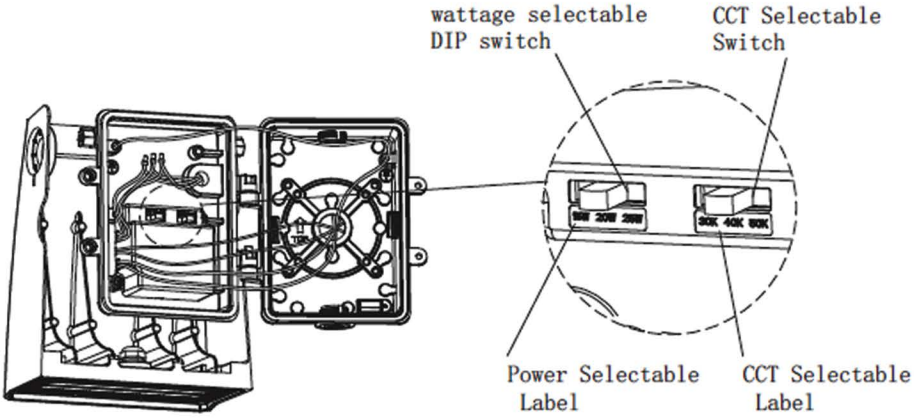
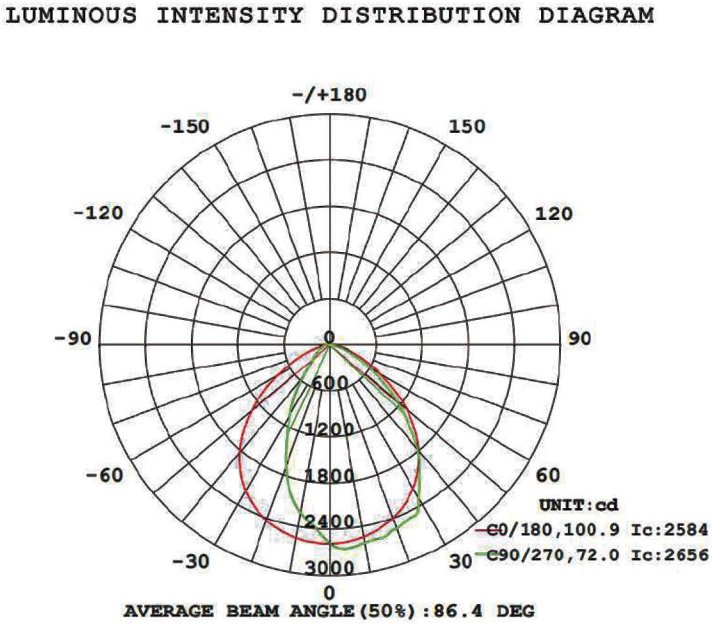
Photometric Data